ZF 4HP22HL (PORSCHE) Code: 1043 050 xxx
4 SPEED RWD TRANSAXLE (Electronic Control)

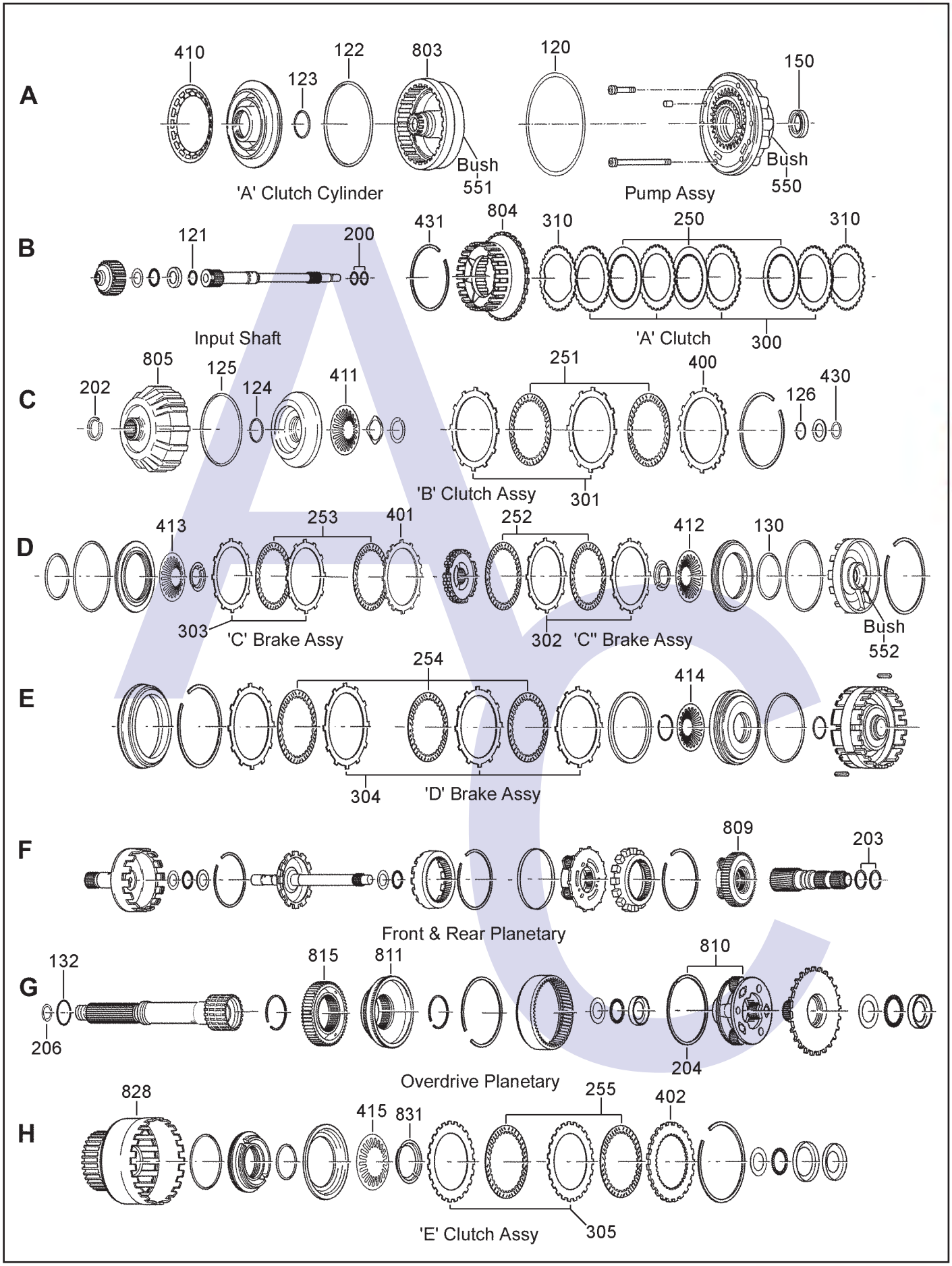

Revision 11/2011

www.automaticchoice.com

AUTOMATIC CHOICE

THE AUTOMATIC TRANSMISSION PARTS WAREHOUSE

ZF 4HP22HL (PORSCHE) Code: 1043 050 xxx
4 SPEED RWD TRANSAXLE (Electronic Control)

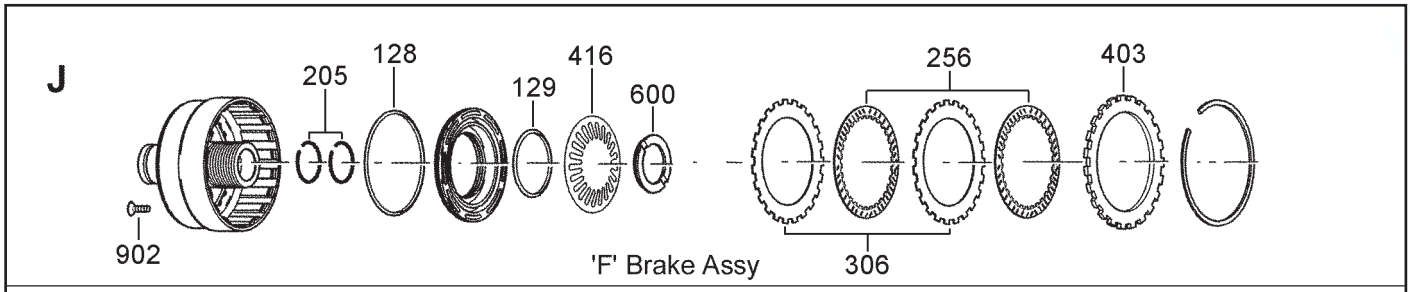

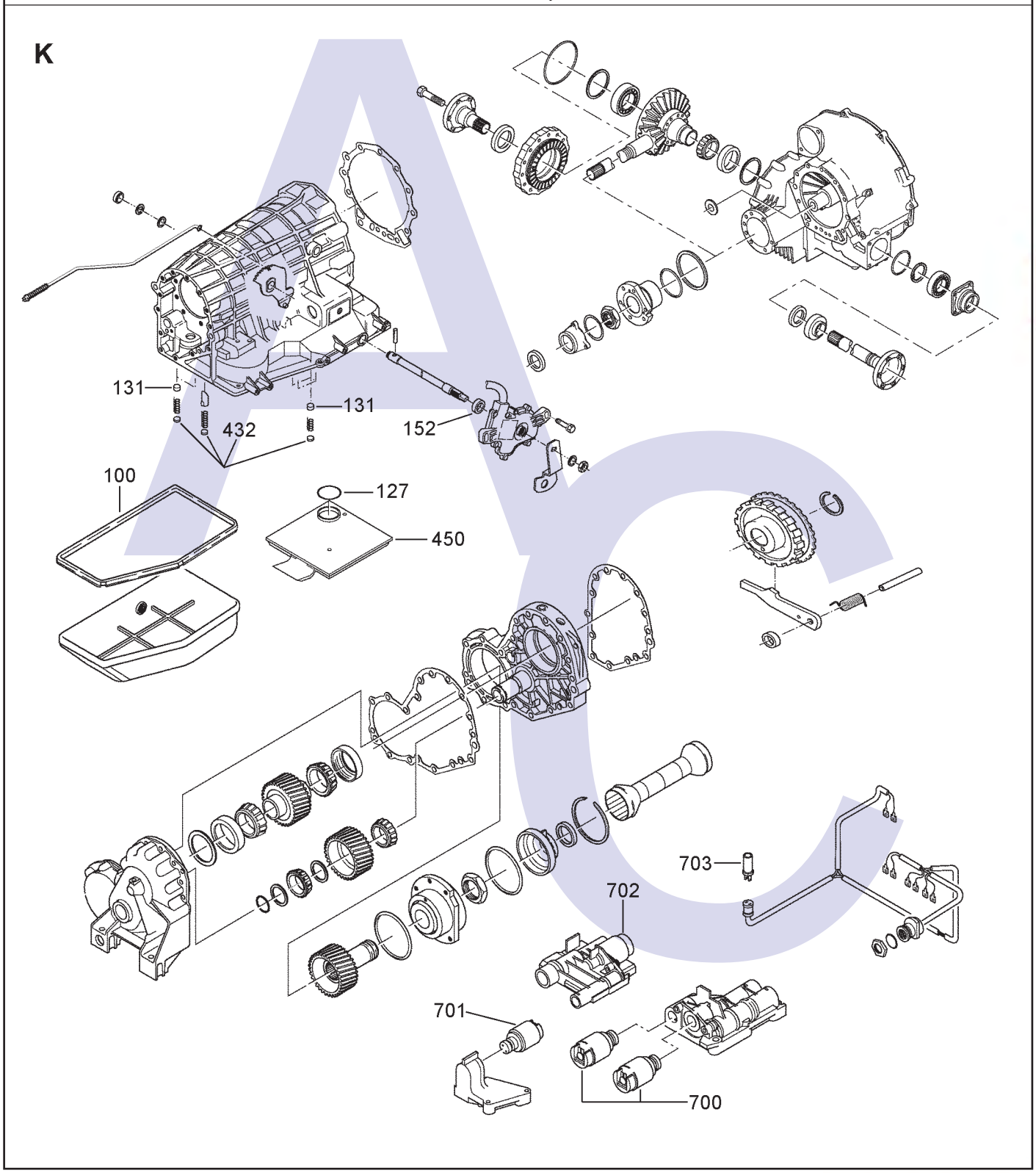

AUTOMATIC CHOICE
THE AUTOMATIC TRANSMISSION PARTS WAREHOUSE

www.automaticchoice.com

ZF 4HP22HL (PORSCHE) Code: 1043 050 xxx
4 SPEED RWD TRANSAXLE (Electronic Control)

ILL NO.	DESCRIPTION	YEARS	QTY	PART NO
	KITS			
Kit	Overhaul (OEM)	91-ON	1	**4HP22.OHK07**
Kit	Clutch Kit, 'A' Clutch (POWERPACK™ Alto)	91-ON	1	**4HP22.CK51**
	GASKETS			
100K	Pan Gasket	83-ON	1	**4HP22.GAS09**
NI	Valve Body Gasket	91-ON	1	**4HP22.GAS08**
	RUBBER COMPONENTS			
120A	Pump 'O' Ring	91-ON	1	**4HP22.OR03**
121B	Input Shaft 'O' Ring	91-ON	1	**4HP22.OR14**
122A	'A' Clutch Outer 'O' Ring	91-ON	1	**4HP22.OR01**
123A	'A' Clutch Inner 'O' Ring	91-ON	1	**4HP22.OR12**
124C	'B' Clutch Inner 'O' Ring	91-ON	1	**4HP22.OR12**
125C	'B' Clutch Outer 'O' Ring	91-ON	1	**4HP22.OR06**
126C	'B' Clutch to Sun Shaft 'O' Ring	91-ON	1	**4HP22.OR14**
127K	Filter to Valve Body 'O' Ring	91-ON	1	**4HP22.OR11**
128J	'F' Brake Outer 'O' Ring	91-ON	1	**4HP22.OR04**
129J	'F' Brake Inner 'O' Ring	91-ON	1	**4HP22.OR07**
130D	'C1' Brake Inner 'O' Ring	91-ON	1	**4HP22.OR05**
131K	V. Body to Case Seal	91-ON	6	**4HP22.RUB01**
132G	Output Shaft 'O' Ring	91-ON	1	**4HP22.OR15**
	METAL CLAD SEALS			
150A	Front Pump Body (OEM)	91-ON	1	**3HP22.MCS01**
150A	Front Pump Body (AM)	91-ON	1	**3HP22.MCS51**
152K	Selector Shaft	91-ON	1	**3HP22.MCS03**
	SEALING RINGS			
200B	Input Shaft	91-ON	2	**5HP18.SSR03**
202C	'B' Clutch Drum	91-ON	1	**4HP22.SSR02**
203F	Sun Gear Shaft	91-ON	2	**4HP22.SSR03**
204G	Planetary Set	91-ON	1	**4HP22.SSR07**
205J	'F' Brake to 'E' Clutch	91-ON	2	**4HP22.SSR04**
206G	Output Shaft (Plastic)	91-ON	1	**4HP14.SSR08**
	FRICTION PLATES			
Kit	Friction Plate	91-ON	1	**4HP22.FRPKIT01**
Kit	Friction Plate (Alto)	91-ON	1	**4HP22.FRK51**
250B	'A' Clutch (Forward)	91-ON	5	**3HP22.FRP21**
251C	'B' Clutch (Third & Reverse)	91-ON	4	**3HP22.FRP22**
252D	'C1' Brake (Intermediate & Overrun)	91-ON	2	**3HP22.FRP22**
253D	'C' Brake (Intermediate)	91-ON	3	**3HP22.FRP22**
254E	'D' Clutch	91-ON	5	**3HP22.FRP23**
255H	'E' Clutch (Overdrive Clutch)	91-ON	4	**4HP22.FRP11**
256J	'F' Brake (Overdrive Brake)	91-ON	4	**4HP22.FRP11**

ILL NO.	DESCRIPTION	YEARS	QTY	PART NO
	STEEL PLATES			
Kit	Steel Plate Kit (4HP22)	91-ON	1	**4HP22.STK01**
Kit	Steel Plate (Alto)	91-ON	1	**4HP22.STK51**
300B	'A' Clutch Selective (2.10mm)	91-ON	AR	**3HP22.STP08**
300B	'A' Clutch Selective (1.80mm)	91-ON	AR	**3HP22.STP02**
300B	'A' Clutch Selective (1.50mm)	91-ON	AR	**3HP22.STP06?**
300B	'A' Clutch Selective (1.20mm)	91-ON	AR	**3HP22.STP09**
301C	'B' Clutch Selective (2.10mm)	91-ON	AR	**3HP22.STP04**
301C	'B' Clutch Selective (1.80mm)	91-ON	AR	**3HP22.STP03**
302D	'C1' Brake Selective (2.10mm)	91-ON	AR	**3HP22.STP04**
302D	'C1' Brake Selective (1.80mm)	91-ON	AR	**3HP22.STP03**
302D	'C1' Brake Selective (1.50mm)	91-ON	AR	**3HP22.STP05**
303D	'C' Brake Selective (2.10mm)	91-ON	AR	**3HP22.STP04**
303D	'C' Brake Selective (1.80mm)	91-ON	AR	**3HP22.STP03**
303D	'C' Brake Selective (1.50mm)	91-ON	AR	**3HP22.STP05**
304E	'D' Brake Selective (2.10mm)	91-ON	AR	**3HP22.STP04**
304E	'D' Brake Selective (1.80mm)	91-ON	AR	**3HP22.STP03**
304E	'D' Brake Selective (1.50mm)	91-ON	AR	**3HP22.STP05**
304E	'D' Brake Selective (1.20mm)	91-ON	AR	**4HP22.STP03**
305H	'E' Clutch (1.50mm)	91-ON	4-5	**4HP22.STP02**
306J	'F' Brake (2.00mm)	91-ON	3-4	**4HP22.STP01**
310B	'A' Clutch Waved (1.00mm)	91-ON	2	**3HP22.STP01**
310B	'A' Clutch Waved (1.60mm)	91-ON	2	**3HP22.STP07**
	PRESSURE PLATES			
400C	'B' Clutch (4.50mm)	83-ON	1	**4HP22.PP02**
401D	'C' Brake (4.50mm)	83-ON	1	**4HP22.PP02**
402H	'E' Clutch	91-ON	1	**4HP22.PP05**
403J	'F' Brake	91-ON	1	**4HP22.PP06**
	SPRINGS & CIRCLIPS			
410A	'A' Clutch Diaphragm Spring	91-ON	1	**4HP22.DIA01**
411C	'B' Clutch Diaphragm Spring	91-ON	1	**4HP22.DIA05**
412D	'C1' Brake Diaphragm Spring	91-ON	1	**4HP22.DIA06**
413D	'C' Brake Diaphragm Spring	91-ON	1	**4HP22.DIA06**
414E	'D' Brake Diaphragm Spring	91-ON	1	**4HP22.DIA03**
415H	'E' Clutch Diaphragm Spring	91-ON	1	**4HP22.DIA04**
416J	'F' Brake Diaphragm Spring	91-ON	1	**4HP22.DIA02**
430C	Circlip 'B' Clutch to Sun Shaft	91-ON	1	**4HP22.CIR01**
431B	Circlip 'A' Clutch Retaining	91-ON	1	**4HP22.CIR02**
432K	Circlip Case sealing Rubber Compression Spring	91-ON	7	**4HP22.CIR03**
	FILTERS			
450K	Pick Up Filter	91-ON	1	**4HP22.FIL04**
	BUSHINGS			
550A	Front Pump Body Bush (13mm Wide)	91-ON	1	**3HP22.BUS01**
550A	Front Pump Body Bush (17mm Wide)	91-ON	1	**4HP22.BUS01**
551A	'A' Clutch Housing	91-ON	1	**4HP18.BUS01**
552D	C1 Clutch Housing	91-ON	1	**4HP18.BUS01**
NI	Centre Support	91-ON	1	**4HP18.BUS01**
	THRUST WASHERS & SELECTIVES			
600J	'F' Brake Retainig 'C' Clip	91-ON	1	**4HP22.THW01**

AUTOMATIC CHOICE
THE AUTOMATIC TRANSMISSION PARTS WAREHOUSE

ZF 4HP22HL (PORSCHE) Code: 1043 050 xxx
4 SPEED RWD TRANSAXLE (Electronic Control)

ILL NO.	DESCRIPTION	YEARS	QTY	PART NO
	BEARING & RACES			
	ELECTRICAL COMPONENTS			
700K	Shift Solenoid	91-ON	3	**5HP18.SOL01**
701K	Lock Up Solenoid	91-ON	1	**5HP18.SOL03**
702K	Pressure Control Solenoid	91-ON	1	**5HP18.SOL02**
703K	Inductive Speed Sensor	87-ON	1	**4HP22.ELE01**
	VALVE BODY PARTS			
NI	Valve Body Plastic Check Ball (6.50mm)	91-ON	AR	**4HP22.BALL01**
NI	Valve Body Plastic Check Ball (4.50mm)	91-ON	AR	**4HP22.BALL02**
NI	Encapsulated Plastic Ball Valve Fits in Rear of Lower Valve Body (Fits Codes **1043 050** 006, 007, 008, 009, 010, 013, 014)	91-ON	1	**4HP22.VA01**
NI	'E' Accumulator Spring (Codes **1043 050** 006,007, 008, 009, 010, 013, 014)	91-ON	1	**4HP22.SPR11**
	HARDWARE			
803A	'A' Clutch Cylinder	91-ON	1	**4HP22.DRU02**
804B	'A' & 'B' Clutch Carrier	91-ON	1	**4HP22.HUB01**
805C	'B' Clutch Cylinder (4 Plate)	91-ON	1	**4HP22.DRU06**
809F	Front Planet Assembly (4 Pinion with OWC Assy	91-ON	1	**4HP22.PL02**
810G	Over Drive Planet Assembly	91-ON	1	**4HP22.PL01**
811G	Overdrive One Way Clutch Assy	91-ON	1	**4HP22.OWC02**
815G	Splined Hub (Overdrive One Way Clutch)	91-ON	1	**4HP22.HUB02**
828H	'E' Clutch Drum (Codes **1043 050** 006, 007, 008, 009, 010, 013, 014)	91-ON	1	**4HP22.DRU10**
831H	Retainer 'E' Clutch Diaphragm	91-ON	1	**4HP22.CIR05**
	SPECIAL ITEMS			
902J	'F' Brake to Case Screw	83-ON	10	**4HP22.NUT01**

ILL NO.	DESCRIPTION	YEARS	QTY	PART NO

AUTOMATIC CHOICE
THE AUTOMATIC TRANSMISSION PARTS WAREHOUSE