ALLISON AT540, 543, 545

AUTOMATIC CHOICE
THE AUTOMATIC TRANSMISSION PARTS WAREHOUSE

A

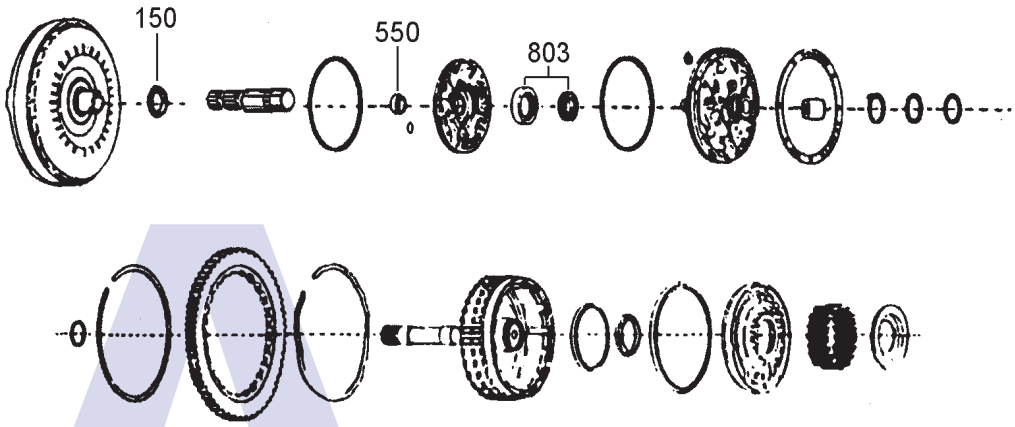

B

Forward Clutch

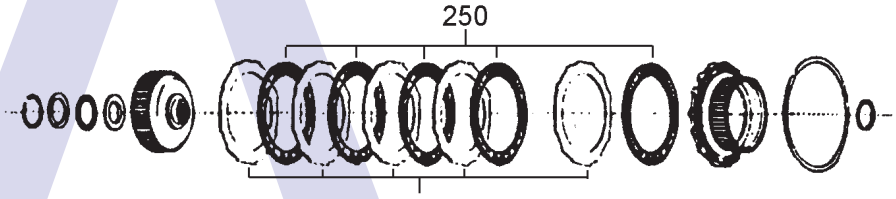

Fourth Range Clutch

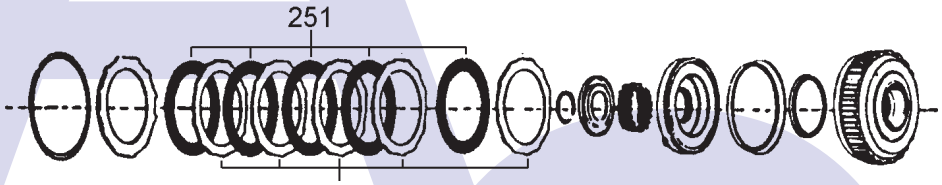

C

Third Range Clutch

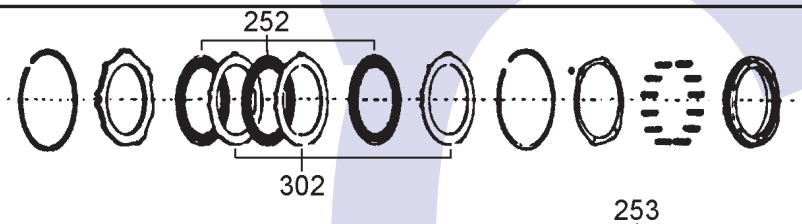

Second Range Clutch

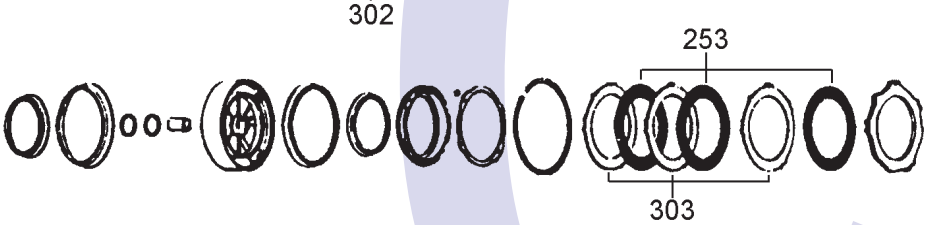

D

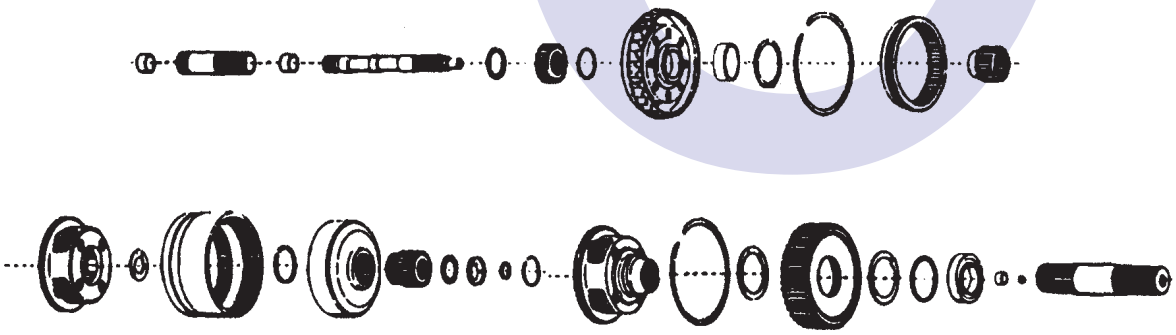

Revision 08/2011

www.automaticchoice.com

ALLISON AT540, 543, 545

E

First Range Clutch

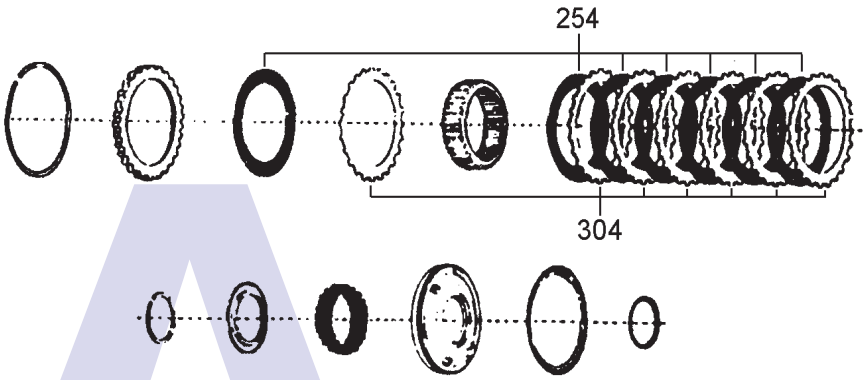

F

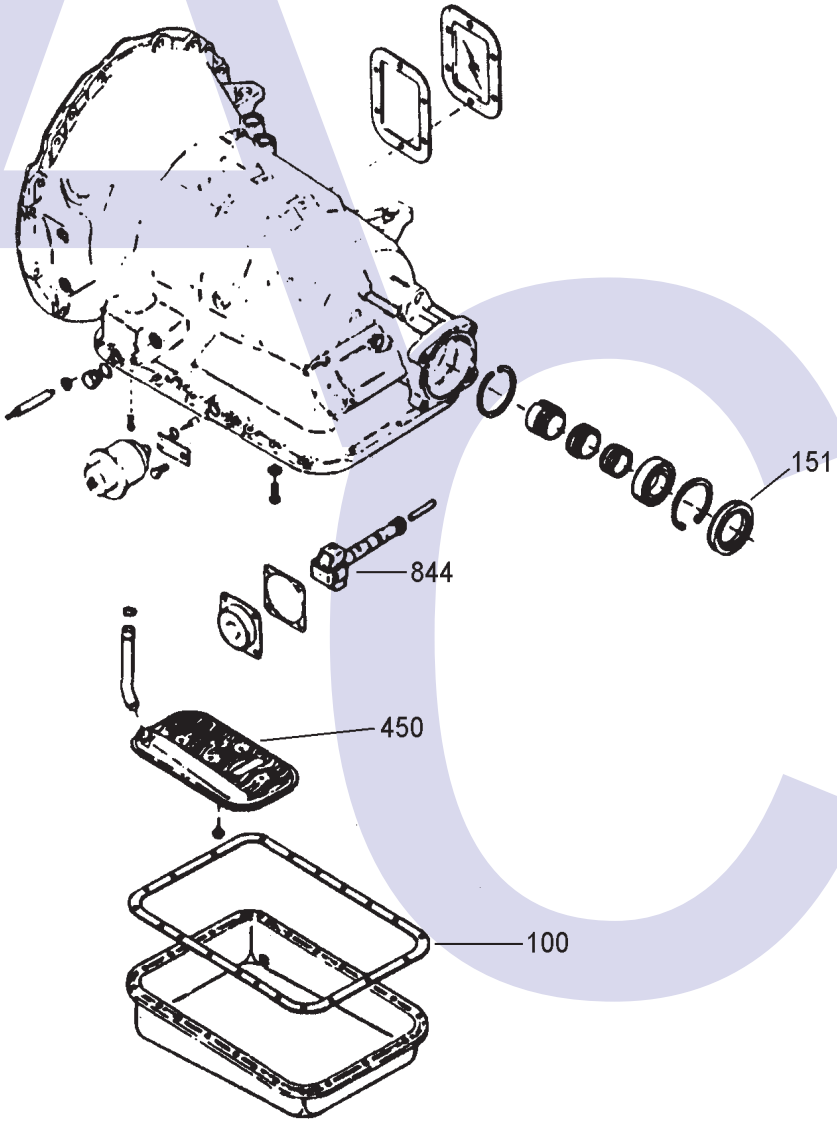

AUTOMATIC CHOICE
THE AUTOMATIC TRANSMISSION PARTS WAREHOUSE

ALLISON AT540, 543, 545

ILL NO.	DESCRIPTION	YEARS	QTY	PART NO
KITS				
Kit	Master Overhaul (AT540/545)	70-ON	1	**AT545.MOHK01**
Kit	Master Overhaul (AT543 Only)	70-ON	1	**AT545.MOHK02**
Kit	Overhaul Kit (Transtec)	70-ON	1	**AT545.OHK01**
Kit	Bush Kit	70-ON	1	**AT545.BK01**
GASKETS				
100F	Pan Gasket (Cork)	70-ON	1	**AT545.GAS01**
100F	Pan Gasket (Duraprene)	70-ON	1	**AT545.GAS10**
RUBBER COMPONENTS				
METAL CLAD SEALS				
150A	Converter Seal	70-ON	1	**TH400.MCS03**
151F	Extension Seal	70-ON	1	**AT545.MCS02**
MOULDED PISTONS				
SEALING RINGS				
FRICTION PLATES				
250B	Forward (226mm OD x 42T)	70-ON	5	**TH400.FRP03**
251B	Fourth (226mm OD x 42T)	70-ON	5	**TH400.FRP03**
252C	Third (231mm OD x 80T)	70-ON	3	**AT545.FRP02**
253C	Second (231mm OD x 80T)	70-ON	3	**AT545.FRP02**
254E	First (206mm OD x 60T)	70-ON	7	**AT545.FRP03**
STEEL PLATES				
300B	Forward (2.30mm x 12T)	70-ON	5	**TH400.STP03**
301B	Fourth (2.30mm x 12T)	70-ON	5	**TH400.STP03**
302C	Third (2.50mm x 9T)	70-ON	3	**AT545.STP02**
303C	Second (2.50mm x 9T)	70-ON	3	**AT545.STP02**
304E	First (2.50mm x 30T)	70-ON	7	**AT545.STP03**
PRESSURE PLATES				
SPRINGS & CIRCLIPS				

ILL NO.	DESCRIPTION	YEARS	QTY	PART NO
FILTERS				
450F	Filter (Flat)	70-ON	1	**AT545.FIL01**
450F	Filter (Deep Pan)	70-ON	1	**AT545.FIL02**
BANDS				
BUSHINGS				
Kit	Bush Kit (AT540 & Early AT545) (7 Bushings)	70-ON	1	**AT545.BK01**
Kit	Bush Kit (Late AT545) (7 Bushings)	70-ON	1	**AT545.BK02**
550A	Pump Body (Bronze)	70-ON	1	**AT545.BUS01**
550A	Pump Body (PTFE Lined) (Sonnax® Click here for Info)	64-98	1	**TH180.BUS02**
THRUST WASHERS & BEARINGS				
Kit	Bearing Kit	70-ON	1	**AT545.TWK02**
NI	Thrust Washer (Bronze) (Front Planetary)	70-ON	12	**AT545.THW01**
NI	Thrust Washer (Steel) (Front Planetary)	70-ON	12	**AT545.THW02**
NI	Thrust Washer (Bronze) (Centre Planetary)	70-ON	8	**AT545.THW03**
NI	Thrust Washer (Steel) (Centre Planetary)	70-ON	8	**AT545.THW04**
ELECTRICAL COMPONENTS				
VALVE BODY PARTS				
HARD PARTS				
803A	Pump Gear Set (18.415mm Thick)	70-ON	1	**AT545.PUM03**
844F	Governor Assembly (Code #461) (Up to 2800 RPM Range)	70-ON	1	**AT545.GOV01**
SPECIAL ITEMS				
TOOLS & MANUALS				
NI	ATSG Rebuild Manual	70-ON		**AT545.MAN01**