4F27E (Ford Focus) & MAZDA FN4A-EL

4 SPEED FWD (Full Electronic Control)

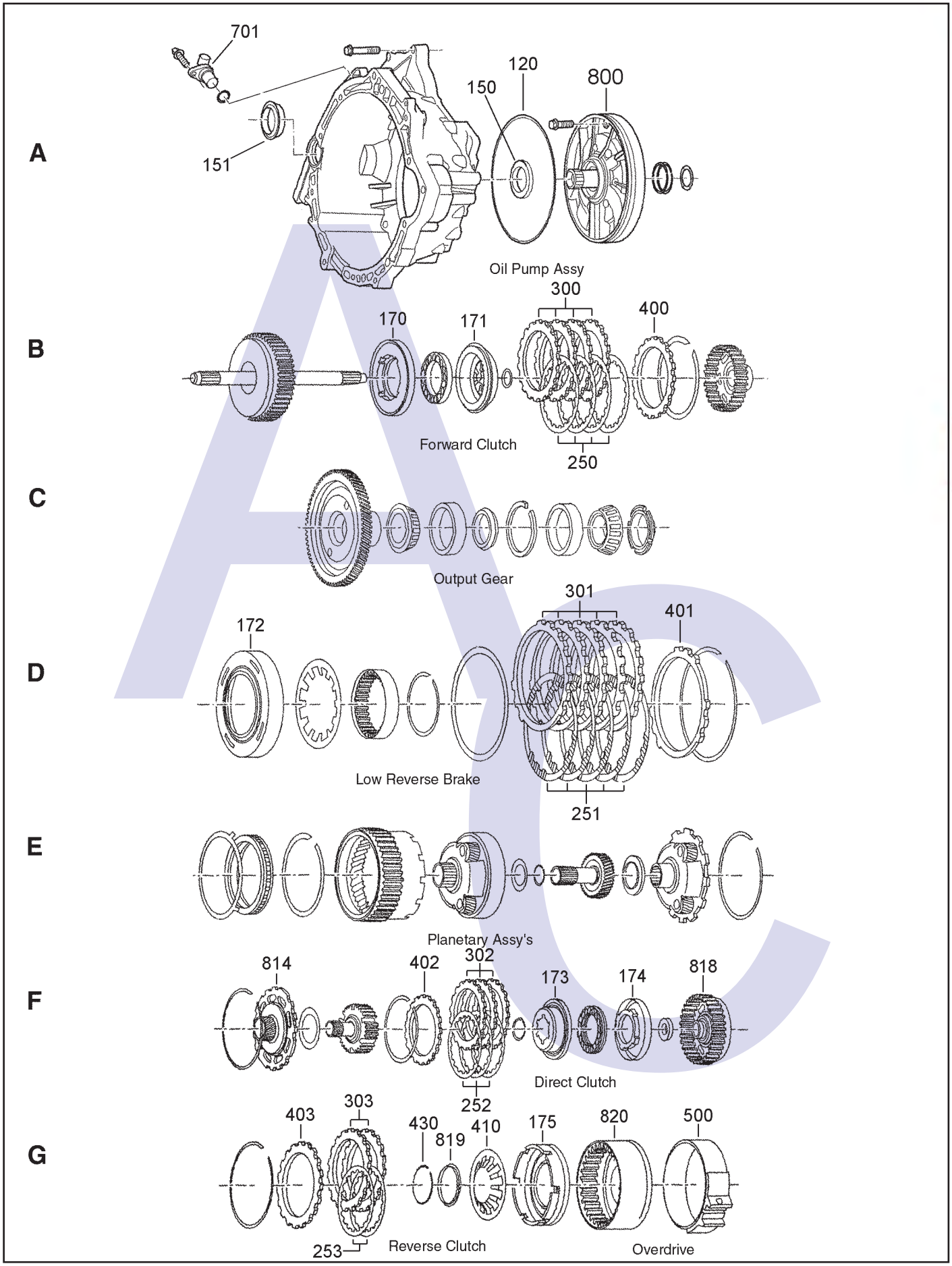

AUTOMATIC CHOICE
THE AUTOMATIC TRANSMISSION PARTS WAREHOUSE

Revision 02/2012
www.automaticchoice.com

4F27E (Ford Focus) & MAZDA FN4A-EL

4 SPEED FWD (Full Electronic Control)

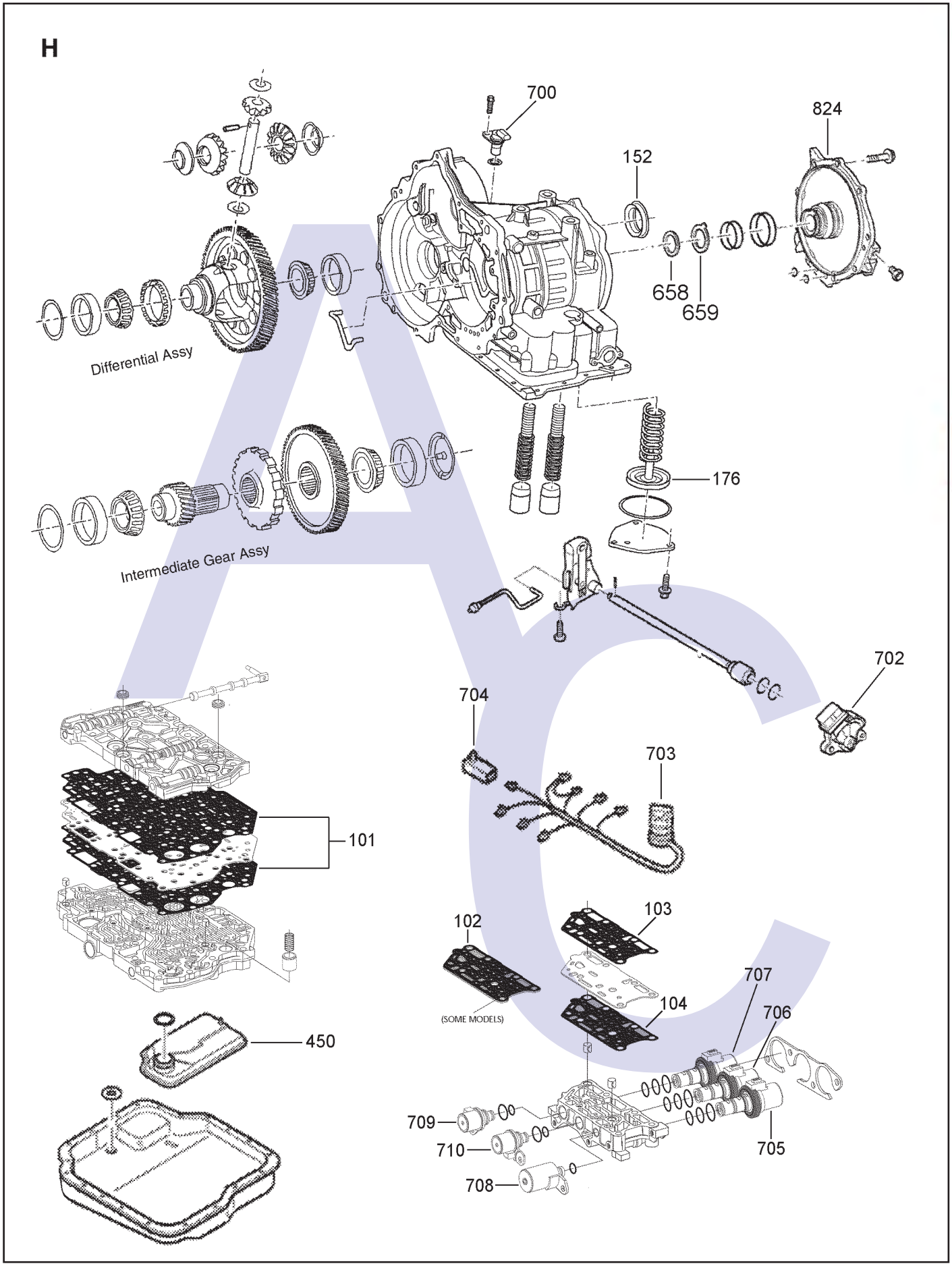

AUTOMATIC CHOICE
THE AUTOMATIC TRANSMISSION PARTS WAREHOUSE

www.automaticchoice.com

4F27E (Ford Focus) & MAZDA FN4A-EL

4 SPEED FWD (Full Electronic Control)

ILL NO.	DESCRIPTION	YEARS	QTY	PART NO
	KITS			
Kit	Overhaul Kit Ford 4F27E (Transtec) (With Bonded Pistons)	00-ON	1	**4F27E.OHK01**
Kit	Overhaul Kit Ford 4F27E (Precision) (With Bonded Pistons)	00-ON	1	**4F27E.OHK51**
Kit	Overhaul Kit Mazda FN4A-EL (Transtec) (With Bonded Pistons)	99-ON	1	**4F27E.OHK02**
Kit	Overhaul Kit Mazda FN4A-EL (Transtec) (Without Bonded Pistons)	99-ON	1	**4F27E.OHK04**
Kit	Overhaul Kit Mazda FN4A-EL (Precision) (With Bonded Pistons)	99-ON	1	**4F27E.OHK52**
	GASKETS			
NI	Pan Gasket Ford/Mazda (Duraprene)	99-ON	1	**4F27E.GAS01**
101H	Main Valve Body Gasket	99=ON	2	**4F27E.GAS02**
102H	Solenoid Gasket (Moulded with Spacer Plate)	99-ON	1	**4F27E.GAS05**
103H	Upper Soleniod Body Gasket	99-ON	1	**4F27E.GAS04**
104H	Lower Solenoid Body Gasket	99-ON	1	**4F27E.GAS03**
	RUBBER COMPONENTS			
120A	Pump Lathe Cut Seal Ford Only)	00-ON	1	**4F27E.SQR01**
120A	Pump 'O' Ring (Mazda Only)	99-ON	1	**4F27E.OR01**
	METAL CLAD SEALS			
150A	Converter Seal	00-ON	1	**4F27E.MCS01**
151A	Axle Seal R/H Side (Ford Only)	00-ON	1	**4F27E.MCS02**
151A	Axle Seal R/H Side (Mazda Only)	99-ON	1	**4F27E.MCS03**
152H	Axle Seal L/H Side (Ford Only)	00-ON	1	**4F27E.MCS02**
152H	Axle Seal L/H Side (Mazda Only)	99-ON	1	**4F27E.MCS03**
	MOULDED PISTONS			
170B	Forward Clutch Apply Piston	99-ON	1	**4F27E.PIS03**
171B	Forward Clutch Balance Piston	99-ON	1	**4F27E.PIS04**
172D	Low/Reverse Brake Piston	99-ON	1	**4F27E.PIS07**
173F	Direct Clutch Apply Piston	99-ON	1	**4F27E.PIS05**
174F	Direct Clutch Balance Piston	99-ON	1	**4F27E.PIS06**
175G	Reverse Clutch (Short Mazda Only)	99-ON	1	**4F27E.PIS01**
175G	Reverse Clutch (Tall Ford Only)	99-ON	1	**4F27E.PIS02**
176H	Servo Piston (Overdrive)	99-ON	1	**4F27E.SER01**
	SEALING RINGS			
Kit	Shaft Sealing Ring Kit	99-ON	1	**4F27E.SRK01**

ILL NO.	DESCRIPTION	YEARS	QTY	PART NO
	FRICTION PLATES			
Kit	Friction Plate Kit (Ford)	00-ON	1	**4F27E.FRK01**
Kit	Friction Plate Kit (Mazda)	00-ON	1	**4F27E.FRK03**
Kit	Friction Plate Kit (Alto)	00-ON	1	**4F27E.FRK51**
250B	Forward Clutch (115mm OD x 1.60mm x 32T)	99-ON	4	**4F27E.FRP01**
251D	Low Reverse Brake (155mm OD x 1.60mm x 42T)	99-ON	5	**4F27E.FRP04**
252F	Direct Clutch Ford Only (115mm OD x 1.60mm x 32T)	99-ON	3	**4F27E.FRP01**
252F	Direct Clutch Internal Spline Mazda Only (Alto) (115mm OD x 2.50mm x 32T)	03-ON	3	**4F27E.FRP56**
302F	Direct Clutch External Spline (Alto) Mazda Only (93mm ID x 2.50mm x 32T)	03-ON	3	**4F27E.FRP55**
253G	Reverse Clutch (140mm OD x 1.60mm x 32T)	99-ON	2	**4F27E.FRP02**
	STEEL PLATES			
Kit	Steel Plate Kit (Ford)	00-ON	1	**4F27E.STK01**
Kit	Steel Plate Kit (Ford) (Alto)	00-ON	1	**4F27E.STK51**
Kit	Steel Plate Kit (Mazda)	99-ON	1	**4F27E.STK02**
300B	Forward Clutch (93mm ID x 1.60mm x 32T)	99-ON	4	**4F27E.STP01**
301D	Low Reverse Brake (142mm ID x 1.60mm x 12T)	99-ON	5	**4F27E.STP05**
302F	Direct Clutch Ford Only (93mm ID x 3.30mm x 32T)	00-ON	3	**4F27E.STP04**
303G	Reverse Clutch (127mm ID x 1.60mm x 36T)	99-ON	2	**4F27E.STP02**
	PRESSURE PLATES			
400B	Forward Clutch (3.80mm)	99-ON	1	**4F27E.PP01**
401D	Low Reverse Brake	99-ON	1	**4F27E.PP04**
402F	Direct Clutch	99-ON	1	**4F27E.PP03**
403G	Reverse Clutch (5.00mm)	99-ON	1	**4F27E.PP02**
	SPRINGS & CIRCLIPS			
410G	Diaphragm Spring (Reverse Clutch)	99-ON	1	**4F27E.DIA01**
430G	Retaining Clip (Rev Clutch Diaphragm)	99-ON	1	**4F27E.CIR01**
	FILTERS			
450H	Pan Filter	99-ON	1	**4F27E.FIL01**
450H	Pan Filter (34mm Tube Mazda Demio)	99-ON	1	**FNR5.FIL01**
	BANDS			
500G	Band - 2nd & 4th	99-ON	1	**4F27E.BAN01**
	BUSHINGS			
Kit	Bush Kit	99-ON	1	**4F27E.BK01**
NI	Stator Support	99-ON	2	**4F27E.BUS02**

AUTOMATIC CHOICE
THE AUTOMATIC TRANSMISSION PARTS WAREHOUSE

4F27E (Ford Focus) & MAZDA FN4A-EL

4 SPEED FWD (Full Electronic Control)

ILL NO.	DESCRIPTION	YEARS	QTY	PART NO
	THRUST WASHERS & BEARINGS			
658H	Thrust Bearing, Rear Cover (2 Part) (40mm x 28mm x 2.60mm)	99-ON	1	**4F27E.TOR01**
659H	Bearing Race, Rear Cover (1 tang Selective)			
	(1.70mm)	99-ON	AR	**4F27E.TOR02**
	(1.80mm)	99-ON	AR	**4F27E.TOR03**
	(1.90mm)	99-ON	AR	**4F27E.TOR04**
	(2.10mm)	99-ON	AR	**4F27E.TOR05**
	(2.30mm)	99-ON	AR	**4F27E.TOR06**
	(2.50mm)	99-ON	AR	**4F27E.TOR07**
	ELECTRICAL COMPONENTS			
700H	Speed Sensor - Turbine Shaft	99-ON	1	**4F27E.ELE01**
701A	Speed Sensor - Output	99-ON	1	**4F27E.ELE02**
702H	Range Switch	99-ON	1	**4F27E.ELE03**
703H	Valve Body Loom	99-ON	1	**4F27E.ELE04**
704H	Fluid Temperature Sensor	99-ON	1	**AXODE.ELE04**
705H	Shift Solenoid 'C' (PWM)	99-ON	1	**4F27E.SOL02**
706H	Shift Solenoid 'E' (PWM)	99-ON	1	**4F27E.SOL02**
707H	Shift Solenoid 'D' (PWM)	99-ON	1	**4F27E.SOL02**
708H	Solenoid (Pressure Control)	99-ON	1	**4F27E.SOL01**
709H	Shift Solenoid 'B' (On/Off)	99-ON	1	**4F27E.SOL03**
710H	Shift Solenoid 'A' (On/Off)	99-ON	1	**4F27E.SOL03**
	VALVE BODY PARTS			
Kit	Pressure Regulator Valve Oversize Require Tool 4F27E.VA02 & AG4.VA05 Valve Body Fixture (Sonnax® Click here for Info)	99-ON	1	**4F27E.VA01**
Kit	Tool for 4F27E.VA01 (Sonnax®)	99-ON	1	**4F27E.VA02**
	HARD PARTS			
800A	Pump Assembly	99-ON	1	**4F27E.PUM01**
800A	Pump Assembly (Ford OEM)	99-ON	1	**4F27E.PUM02**
814F	Rear Sun Gear & Input Hub	99-ON	1	**4F27E.SUN01**
818F	Direct Clutch Drum (Ford, Mazda)	99-ON	1	**4F27E.DRU02**
819G	Retainer - Diaphragm Spring (Reverse Clutch)	99-ON	1	**4F27E.RET01**
820G	Reverse Clutch Drum (Ford Focus)	99-ON	1	**4F27E.DRU01**
824H	Rear Cover, Ford Focus (4F27E)	99-ON	1	**4F27E.COV01**
824H	Rear Cover, Mazda 626 (FN4A-EL)	99-ON	1	**4F27E.COV02**
NI	Honing Brush & Accumulator Kit (Superior)	99-ON	1	**4F27E.ACC01**
	SPECIAL ITEMS			
	TOOLS & MANUALS			
NI	ATSG Rebuild Manual	99-ON		**4F27E.MAN01**

Click here to view special tools for this transmission

ILL NO.	DESCRIPTION	YEARS	QTY	PART NO

AUTOMATIC CHOICE
THE AUTOMATIC TRANSMISSION PARTS WAREHOUSE